COMMISSIONERS OF THE LAND OFFICE STATE OF OKLAHOMA
Managing Assets to Support Education

Harry W. Birdwell SECRETARY
Keith Kuhlman ASST. SECRETARY

COMMISSIONERS:
Mary Fallin GOVERNOR • **Todd Lamb** LT. GOVERNOR • **Gary Jones** STATE AUDITOR & INSPECTOR • **Joy Hofmeister** SUPERINTENDENT of PUBLIC INSTRUCTION • **Jim Reese** COMMISSIONER, STATE BOARD of AGRICULTURE

May 5, 2016

RE: Building Pond
Lease #100607, Lincoln County OK

Dear Vendor,

A Soil Conservation Project Request/Bid Solicitation Form is enclosed for the above-referenced project located on Commissioners of the Land Office property. All bids received will be evaluated on a "**Lowest Responsible**" bid. Bids must be returned to the office in Oklahoma City on or before **May 26, 2016 by 2:00** p.m., to be considered for this project. Bids received after the time and date indicated or incomplete bid forms will not be considered.

If you are interested in being considered for this project, complete the enclosed Project Request/Bid Solicitation Form. You must fill in the Units, Unit Price, Totals and Project Totals fields on the form. Incomplete forms will not be considered.

If you are selected as "Lowest Responsible" bidder; current general liability insurance information along with worker's comp or insurance document showing an exemption from workers compensation will be required.

The project will be considered complete after the supervising Real Estate Management Specialist certifies the specifications of the enclosed bid have been met.

If you are not interested in being considered for this project, please return the form with "No Bid" written on it. This will indicate that you do not wish to bid at this time but may like to bid on future projects.

If you have any questions about this project contact me at 405-521-4149. Be sure to check our website at www.clo.ok.gov for questions and answers that arise during the bidding of this project.

Sincerely,

Tonja DeFatta

Tonja DeFatta, CPO
Real Estate Management Division
tonja.defatta@clo.ok.gov

COMMISSIONERS OF THE LAND OFFICE
SOIL CONSERVATION PROJECT REQUEST/BID SOLICITATION

LESSEE: *Aaron McGee*
LEASE NO: *100607*
LEASE TERM: *2015-2019*
LEGAL: *N/2 & SW/4 Sec 36-15N-5EI*
DIRECTIONS TO JOB SITE: *From intersection of Hwys 66 & 99 in Stroud 3 miles West on Hwy 66 to NE corner of lease*

DATE: *05-03-2016*
COUNTY: *Lincoln*

SUPERVISING REMS *Sean Ison*

ITEM OR PRACTICE (REM ONLY)	CODE	UNITS	UNIT PRICE	TOTALS
Building Pond	*378*			
JOB TOTAL	⇨	⇨		

***Please write "NO BID in the "TOTALS" column if you do not wish to bid, sign and return the bid form to the OKC office.**

Project Specifications: Construct pond and pond dam to specifications of NRCS requirements provided. Must be done to the satisfaction of the supervising REMS. Justification: To provide a water source with a higher water holding capacity for livestock use during drought conditions.

Bid according to units provided above. If you should choose to give a flat rate instead of bidding by unit price, CLO will not be able to adjust the cost up or down if actual units should change. By Statute 580" 16-3-7, the CLO cannot pay for mileage. "Vendor shall include travel and all associated expenses in the total acquisition price." Do not quote travel and any associated expenses separately on the bid request form.

REQUESTED COMPLETION DATE:

REMS___ S. P. L

_____ **Date**_____

VENDOR ONLY:

1. The undersigned, being familiar with the local conditions affecting the cost of the work, with the Solicitation for Bids and in accordance with the provisions thereof, hereby proposes to furnish all labor, materials and equipment necessary for the sums listed herein.

2. By submitting a bid for services, the bidder certifies that they, and any proposed subcontractors, are in compliance with 25 O. S. §1313 and participate in The Status Verification System. The Status Verification System is defined in 25 O. S. §1312 and includes but is not limited to the free Employment Verification Program (E-Verify) available at www.dhs.gov/E-Verify.

3. The bidder also certifies that they are in compliance with the State of Oklahoma Governor's Executive Order 2012-01, filed February 6, 2012 and effective July 1, 2012, that the use of any tobacco product shall be prohibited on any and all properties owned, leased or contracted for use by the State of Oklahoma, including but not limited to all buildings, land and vehicles owned, leased or contracted for use by agencies or instrumentalities of the State of Oklahoma.

4. In submitting the bid, it is agreed that this bid may not be withdrawn for a period of thirty (30) days after the date bids are due. Work is to start within ten (10) days of notification to proceed by CLO.

Company/Business name_____ **Vendor signature** _____**Date**_____

----------**FOR OFFICE USE ONLY**----------

Work completed in last five years: 8/20/2015- Build pond-cancelled 9/11/15

Floyd Evans 5/4/2016

Conservationist Date

Dir., REM Division Date

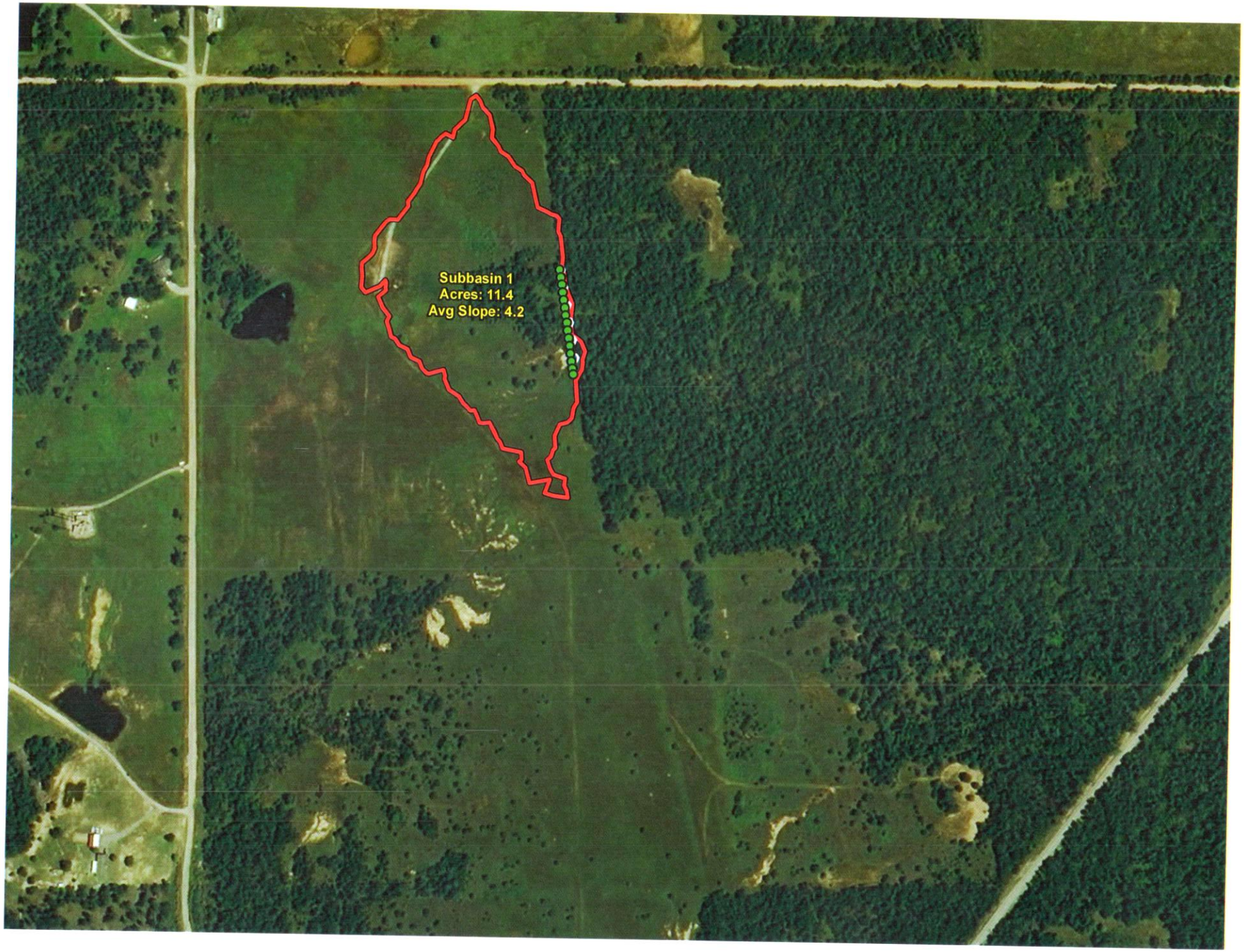
Subbasin 1
Acres: 11.4
Avg Slope: 4.2

Aerial Map

map center: 35° 43' 52.47, 96° 43' 29.43

0ft 827ft 1654ft

36-15N-5E
Lincoln County
Oklahoma

Maps Provided By:
surety® CUSTOMIZED ONLINE MAPPING
© AgriData, Inc. 2016 www.AgriDataInc.com

N
W E
S

5/3/2016

Field borders provided by Farm Service Agency as of 5/21/2008.

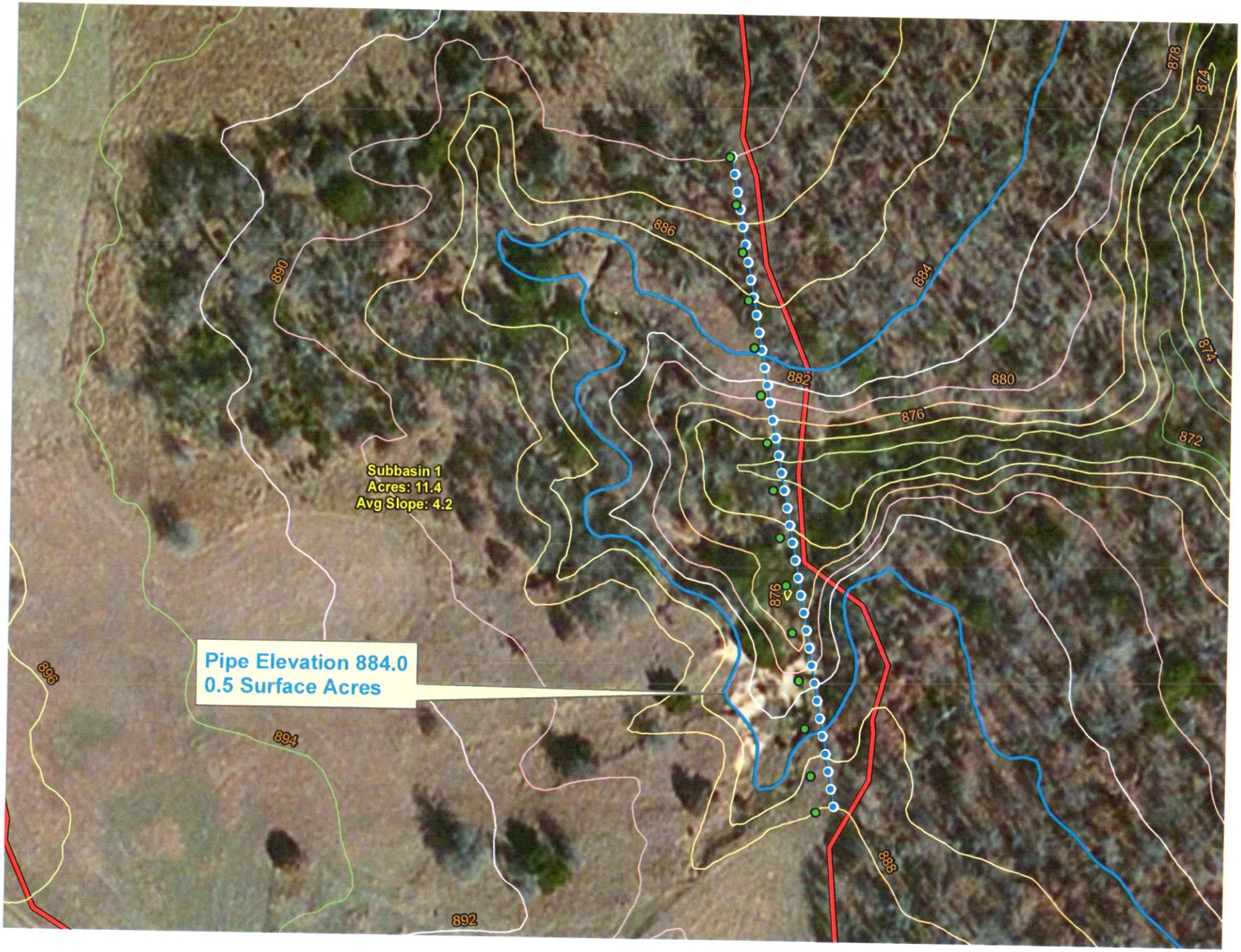
Subbasin 1
Acres: 11.4
Avg Slope: 4.2
Pipe Elevation 884.0
0.5 Surface Acres
886
884
882
880
878
876
874
872
890
896
894
892
888

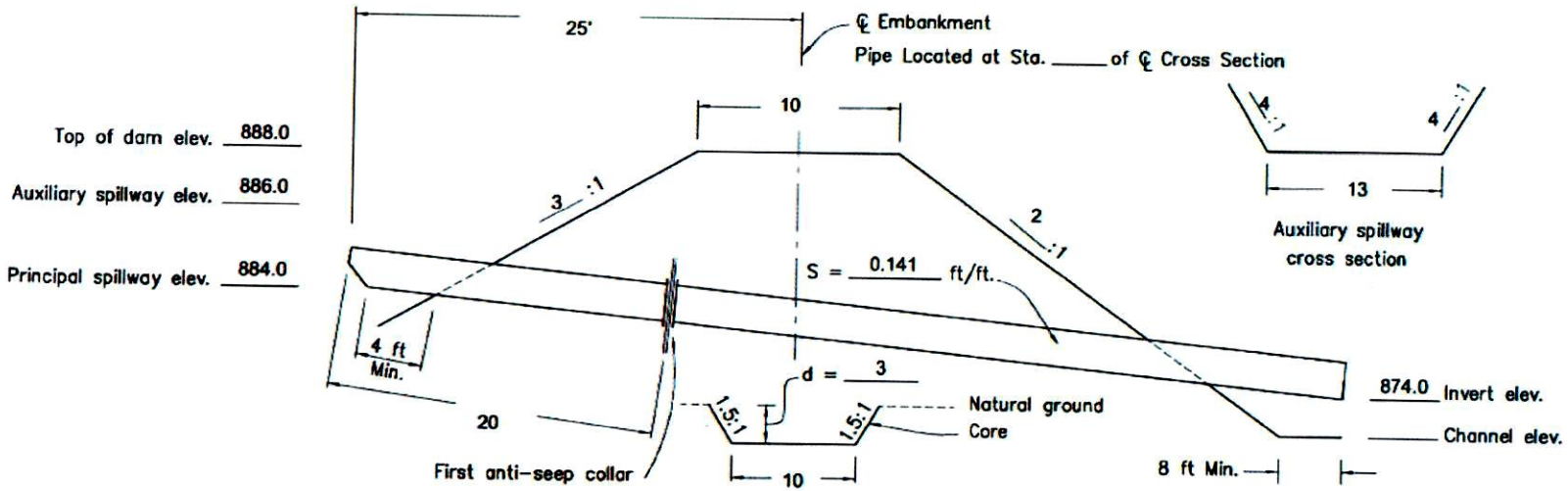

CROSS SECTION OF EMBANKMENT ALONG ℄ OF PRINCIPAL SPILLWAY

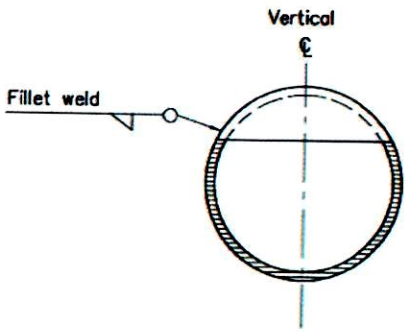

SECTION A–A

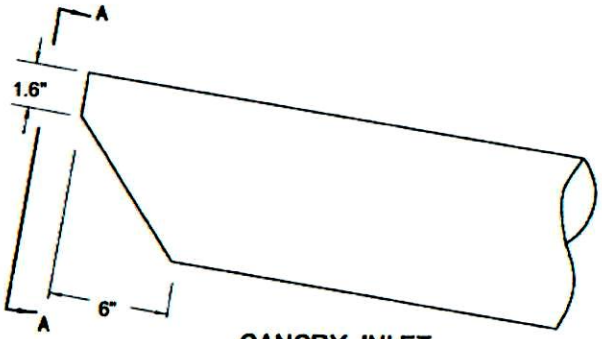

CANOPY INLET

QUANTITY

Earthwork 3,400 cu. yds.

NOT TO SCALE

BARREL

72 Ft. of 8 NPS of .158 inch thick welded steel pipe.

2 Antiseep Collars 5 Ft. x 5 Ft. spaced 20 Ft. apart.
Minimum thickness is 1/4".

CANOPY INLET STRUCTURE
WELDED STEEL PIPE

CLO NW/4 36-15-5
Pond-1
ESTIMATES

U.S. DEPARTMENT OF AGRICULTURE
NATURAL RESOURCES CONSERVATION SERVICE

		Date
Designed		
Checked		
Approved		

Sheet ____ of ____

R. Oller

OK-DWG-No. 210a

(02-06)